ⓔREVISED FOR TIF-5; PST 02.09.11
ⓕREVISED FOR TIF --SPK-- 05.02.13
ⓖREVISED FOR TIF --PKA-- 09.05.13

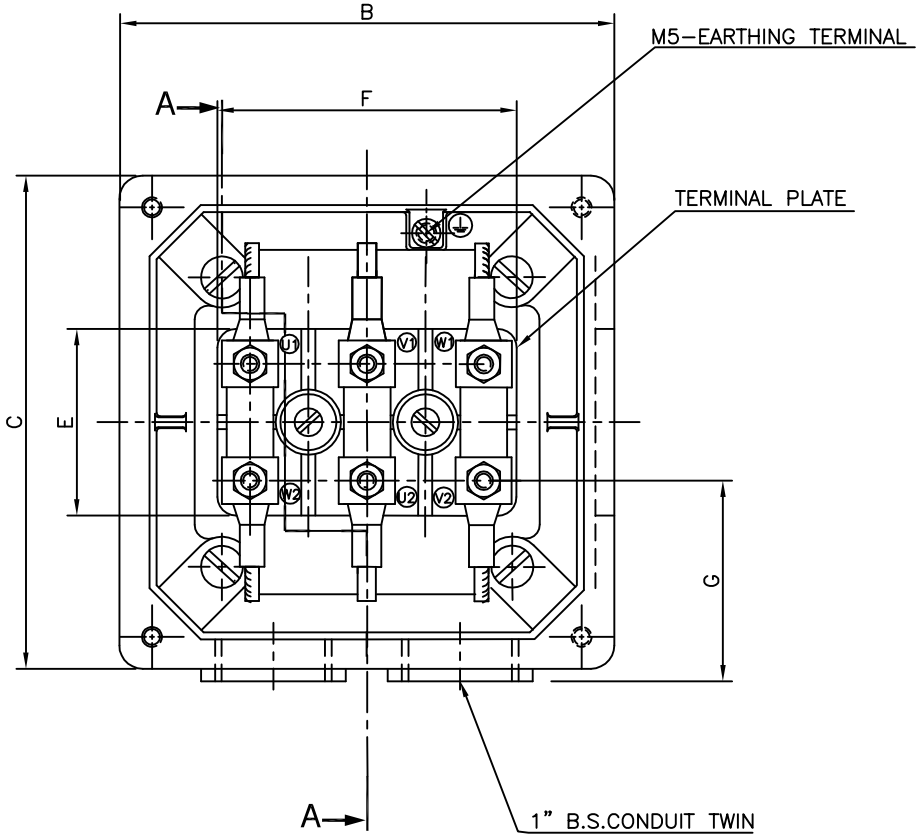


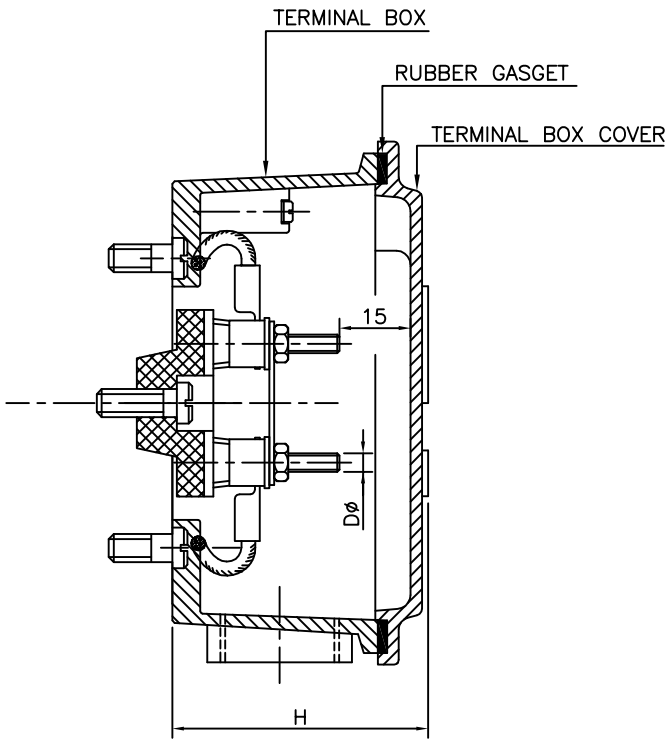


SECTION A-A

ⓖ

| FR.SIZE | TYPE OF TERMINAL BOX | DIMENSIONS | | | | | | |
|---|---|---|---|---|---|---|---|---|
| | | B | C | D | E | F | G | H |
| 100L,112M | gk 230 | 106 | 106 | M4 | 40 | 65 | 43 | 55 |

ⓖⓔ NOTE:

1) TERMINAL BOX MATERIAL = AL.
2) TERMINAL BOX IS ROTATABLE BY 360° IN THE STEP OF 90°.
3) BODY MATERIAL= ALUMINIUM

| NO OFF | DESCRIPTION | ITEM No. | CODE No. | MATERIAL | DRG No. | PATTERN No. OR SIZE | Wt. Kg. |
|---|---|---|---|---|---|---|---|

AMEND-MENT
ⓐ DISTANCE BETWEEN GLAND PLATE & CENTER OF STUD INCORPORATED ON 0.1.06.07, RSA
ⓑ DISTANCE BETWEEN CONDUIT CABLE ENTRY INCORPORATED ON 18.12.10, PRF
ⓒ DISTANCE BETWEEN CENTER OF STUD TO GLAND PLATE INCORPORATED ON 23.03.11.; PRF
ⓓ REVISED FOR TIF-5; PRF 27.07.11

| | DATE | NAME | APPD. |
|---|---|---|---|
| DGN. | - | - | |
| TCD. | | | |
| CHD. | | | |

TITLE : STANDARD(6 TERMINAL)
TERMINAL BOX ASSEMBLY
(FOR gk 230-TYPE 'A')

W.O.No.
SCALE /

BHARAT BIJLEE LTD.
KALWA

DRG. NO. TBAA10LA00 ⓐⓑⓒⓓⓔⓕⓖ
REF.

FR.SIZE 100 L,112M

TYPE

ALL DIMEMSIONS ARE IN mm. UNLESS OTHERWISE SPECIFIED. ▽▽▽ FINE FINISH MACHINING (GRINDING). ▽▽ MEDIUM FINISH MACHINING. ▽ ROUGH MACHINING.